JANTZEN AUDIO

Male Peg - Model #900124

Fits catcher model #900125

Product index: 051-0103
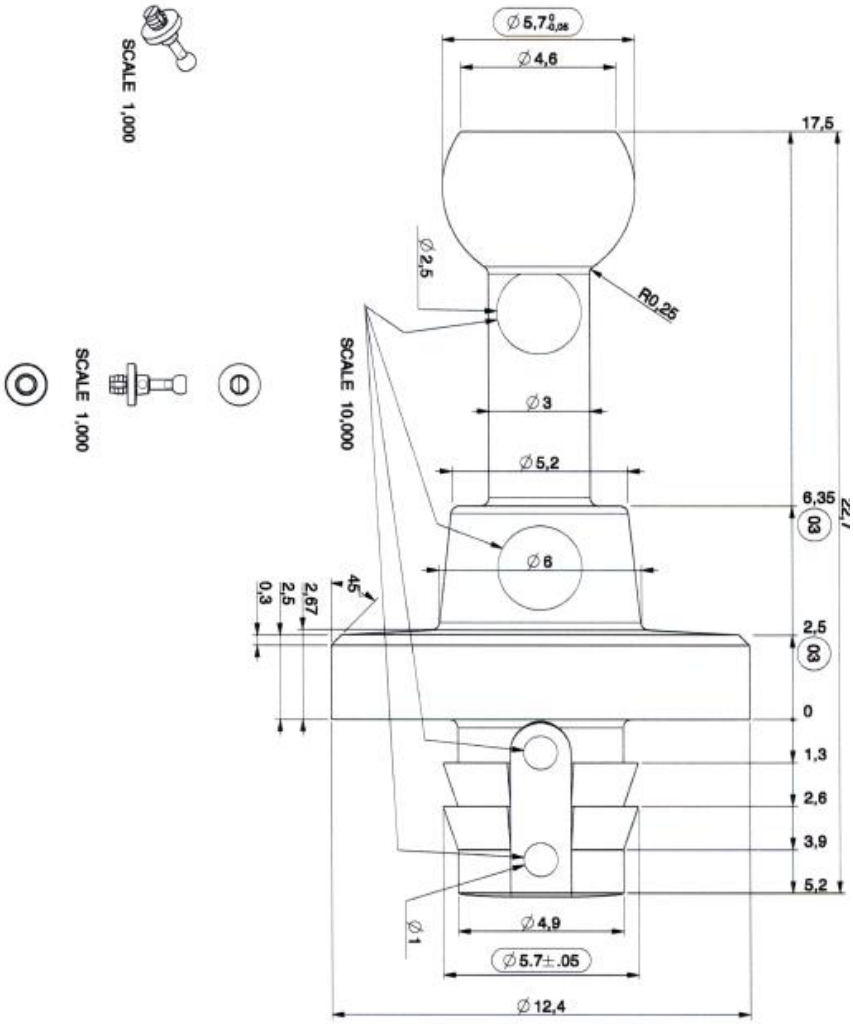
Technical drawing: