# JANTZEN AUDIO

# Female Catcher - Model #900112

Fits peg models #900102 & #900103

Product index: 051-0104
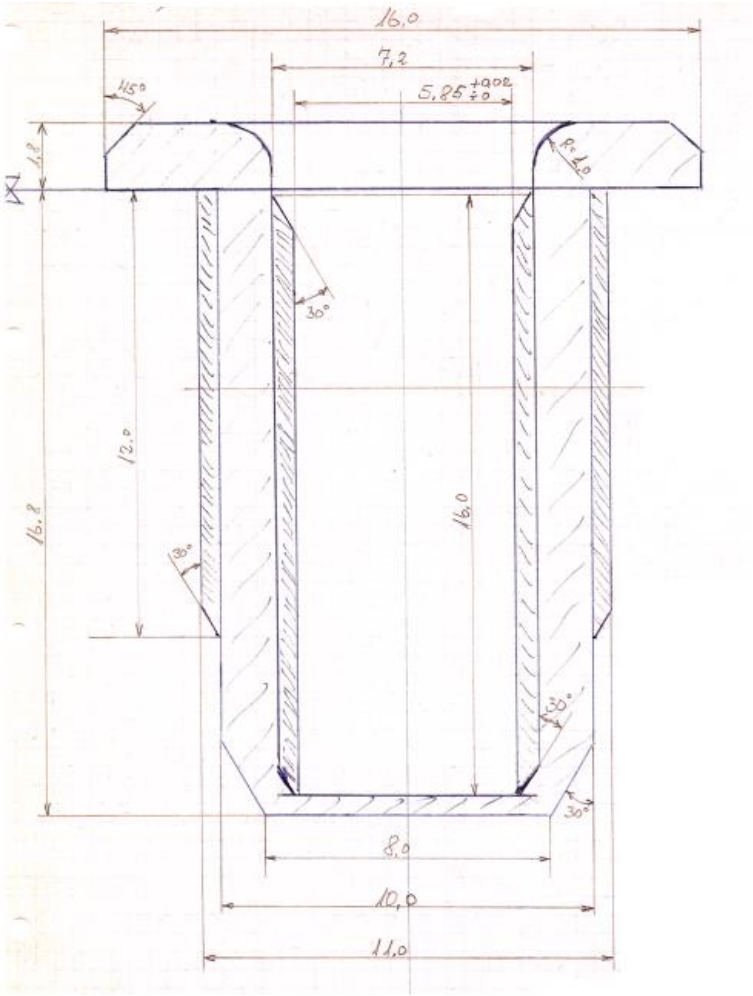
**Technical drawing:**